East Lyme Public Trust Foundation, Inc.

NEWS and UPDATES

February 1, 2015

Volume 3 Number 2

Niantic Bay Boardwalk Reconstruction Progress

Note that nine Footnotes are highlighted in yellow and contain six hyperlinks.[1]

Pile driving started in Niantic on September 25, 2014, as part of the reconstruction of a redesigned western half of Overlook Park (a.k.a. Niantic Bay Boardwalk). On October 30, 2014, 96 pairs of steel sheet piles, each about 52 inches wide, had been driven 25 feet ± deep into the shoreline to create the first 385 feet of a bulkhead as shown in the photograph below. . This steel sheet pile bulkhead will ultimately extend 2,700 feet west from the end of the Amtrak reconstructed eastern half of the "Boardwalk," to Hole in the Wall underpass, 1.1 miles west of Cini Park, the eastern end of the Boardwalk. The

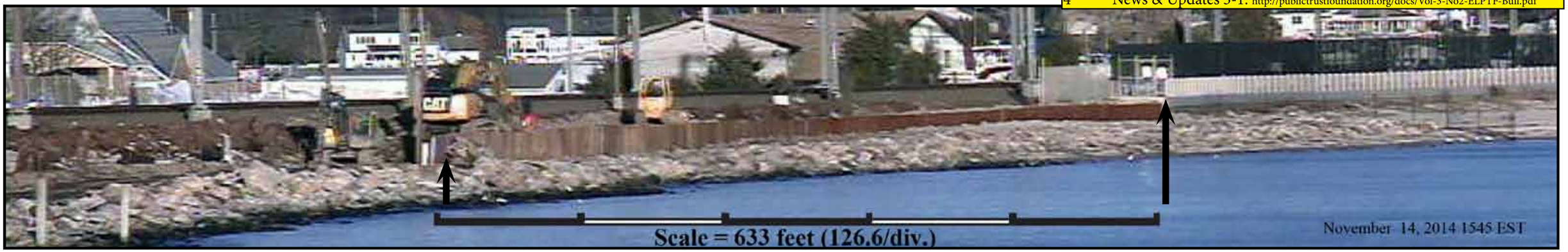

status of reconstruction of the Niantic Bay Boardwalk can be seen in "real time" by viewing it through the webcam hyperlink cited below.[2] The above photograph was taken through that webcam , which is approximately 3,000 feet away from the work site seen here.

The scale bar on the photograph measures the length of the first section of sheet pile bulkhead that will protect the *"Boardwalk"* from waves and storm tides. That bulkhead is armored by stone riprap (i.e. Riprap, also known as rip rap, rip-rap, shot rock, rock armour, or rubble, is rock or other material used to armor shorelines, streambeds, bridge

abutments, pilings and other shoreline structures against scour, and water or ice erosion. It is made from a variety of rock types, commonly granite or limestone, and occasionally from concrete rubble from building and paving demolition).

The photograph above depicts the process by which riprap is placed along the sheet pile bulkwark. The larger excavator on the left is driving piles. The smaller excavator on the right is placing riprap on the ocean side of the sheet pile bulwark. It is adjusting and placing stone that is native to the area, or that is brought to the site or that is excavated at the site.

The fundamental purpose of placing this riprap at the base of the steel sheet pile is to help anchor and protect the bulkhead from wave and storm damage. Therefore, riprap used on this project is specified as "Heavy Riprap," that is, not less than 4'6" in its smallest dimension. It serves to absorb wave energy and also to provide *Reserve Stability,* which is a well-known quality of randomly placed stone riprap. Reserve stability is the ability of this stone blanket to adjust and resettle under wave conditions that may otherwise cause damage to the overall integrity of the **revetment**.[3] Riprap that is built of regular or uniformly placed units, such as concrete blocks, commonly have little or no reserve stability and may fail rapidly if submitted to greater than design conditions.

The photograph at the bottom of this page is of a revetment along a bay shoreline designed to protect a local road from erosion by waves during storms. An example of this design is pictured at the right and has a stone revetment extending from below the water surface up to a sheet pile bulkhead, which has a concrete cap on the piles that run parallel to the roadway shoulder. Storm surges can exceed the pavement elevation here. The concrete cap reinforces and stiffens the sheet piles that were driven into the shore line under the concrete cap before the cap was constructed. This is the same design feature specified for the Niantic Bay Overlook, with the exception that in Niantic, the cap will carry a safety railing defined in News and Updates Vol. 3 No. 1 at the hyperlink cited below.[4] The diagram at the right is based on many years of experience and design applications and is published by the U.S. Federal Highway Administration. By

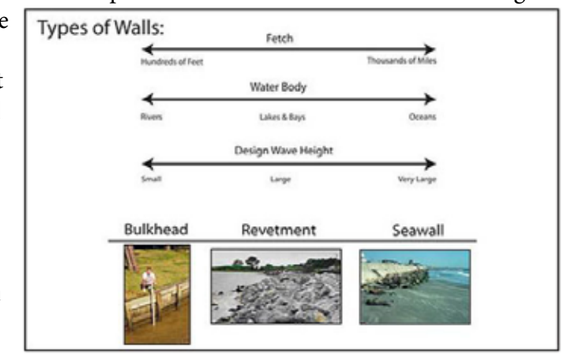

these guidelines, the design specifications being used on the Nianic Bay reconstruction project is intended to resist storm characteristics that have a frequency of once in one hundred years.

The revetment complex in Niantic, built behind a 2,700 foot long steel sheet pile bulkwark and riprap ar-

1 Hyperlink: a reference to data that the reader can directly follow by left clicking the hyperlink, which then takes the reader to the source reference.

2 Park Webcam: http://publictrustfoundation.org/webcam.htm

3 *A **revetment** is a coastal linear structure placed on a beach in such a way as to absorb the energy of incoming water built to preserve the existing uses of the shoreline and to protect the slope against erosion.*

4 News & Updates 3-1: http://publictrustfoundation.org/docs/Vol-3-No2-ELPTF-Bull.pdf

mor, is designed to withstand anticipated 100 year frequency storm waves which may reach the boardwalk after being generated in Long Island Sound across a fetch[5] of several miles. In order to consider the general nature of storm waves that strike the boardwalk, see the seven video clips that were taken at the Hole in the Wall underpass and that are accessible at the hyperlink cited below.[6]
Note in the drawing below that the present day 100 year flood elevation is predicted to be 10.2 feet above Low Tide, which is approximately 3.5 feet below the design elevation of the concrete top on the sheet pile bulwark.

One can expect that when significant storms strike the boardwalk, which is absolutely certain to happen, some of those events will flood the walkway. However, that flooding will not seriously damage the project area for a long time to come. This certitude is based on scientific calculations that the ocean is rising along our coastline at the rate of 3± millimeters a year. If that rate of sea rise remains constant, it will take 325.12 years from now for the 100 Year Storm to bring the sea level to an elevation that will reach the top of the

5 Fetch - the distance traveled by wind or waves across open water.
6 Storm Waves: http://publictrustfoundation.org/media.htm

The photograph above, shows the revetment along the western half of the boardwalk where it starts at the end of the eastern half of the boardwalk that was reconstructed by Amtrak. The steel sheet pile bulwark of the western half of the boardwalk, which is 671 linear feet long in this photograph taken on November 11, 2014, was constructed in 41 work days beginning on September 25, 2014.

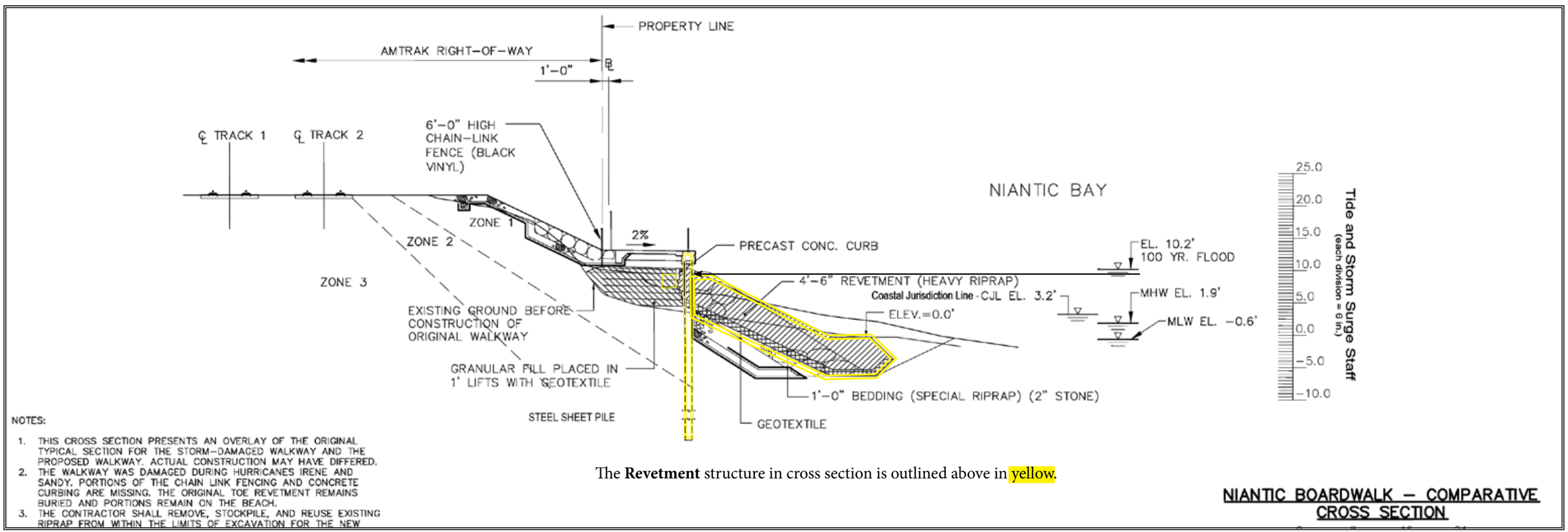

The **Revetment** structure in cross section is outlined above in yellow.

concrete cap that matches the elevation of the walking surface on the boardwalk. Of course, the crests of breaking storm waves will undoubtedly flood the walkway but, the nature of the design, including the revetment on the ocean side of the boardwalk, and the riprap that armors the railroad embankment, will protect the walkway during predictable storm events.

The aerial photograph below was provided by *Goggle Earth* with satellite imagery collected on April 7, 2013. The annotations were added here in order to document and report work progress as observed in the field by the author of this *News and Updates* issue and as reported weekly by the design consultant's Inspector, who was present on the work site whenever construction was underway. In particular, the annotated aerial photograph illustrates progress of pile driving as the revetment advanced from the end of the completed walkway that Amtrak completed. That eastern half of the Park was opened to the public on July 12, 2013. The photograph shows the length of the revetment construction progress completed within the indicated calendar dates, beginning on September 25, 201 , when the first sheet pile was driven at the western end of the walkway as is described in News and Updates Volume 3 No 1 at the hyperlink cited in Footnote [7]

The photograph at the bottom of this page was taken on December 12, 2014, and is a panorama of three combined sequential images captured from the security video camera that sweeps 360º every twelve minutes from its vantage point near the Hole in the Wall on the shore line of Niantic Bay.

You can view the images captured by this camera in real time for yourself by

7 The First Pile:: http://publictrustfoundation.org/docs/Vol-3-No2-ELPTF-Bull.pdf

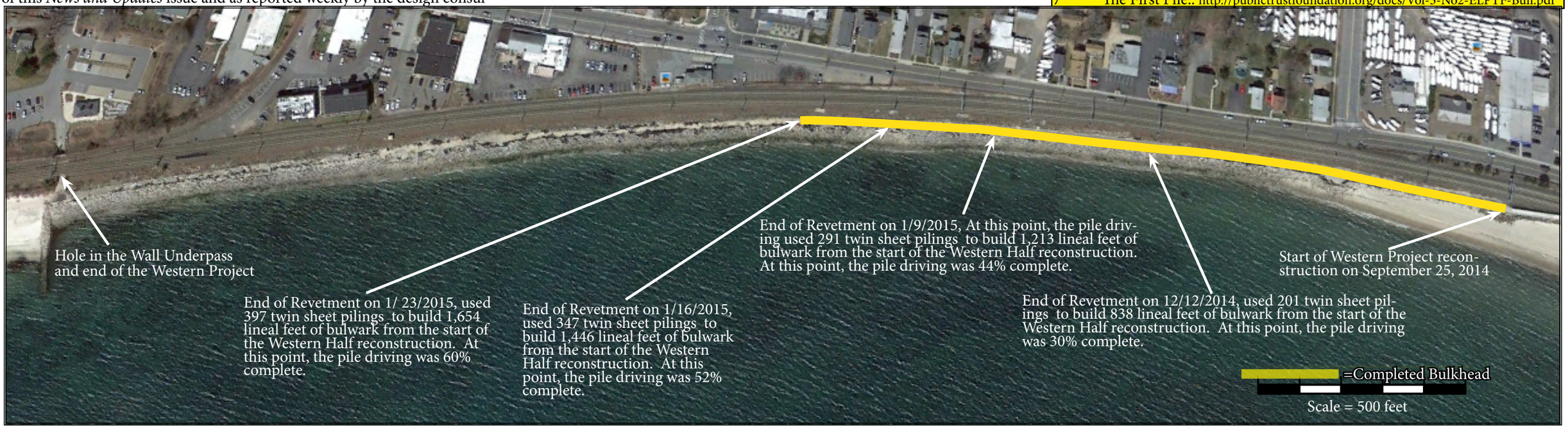

viewing it at the hyperlink cited in Footnote 8.[8] A critical issue that faces this project is construction delays that may result from pile driving do to the possibility of encountering subsurface obstructions, such as stone, and more significantly, boulders that must be excavated and removed from obstructing the placement of the sheet piles.

The photograph above was taken at the end of the 41st work day of construction (November 21, 2014). It shows the excavation needed to remove subsurface stone that had impeded driving the last pile of that day. Some of the stone removed from the hole in the center left of the photograph was deposited along the completed bulkhead on the right of the photograph. The location of this bulwark section along Main Street (Route 156) lies across from Skippers Restaurant. The flag in front of that address is seen in the top center of this view.

The diagram to the right was taken from the General Notes in the project drawings and illustrates the wave forces that are expected to impact the bulkhead of the project revetment. These forces were calculated by Applied Coastal Research & Engineering, Inc. of Mashpee, Massachusetts, and, inform the design and material specifications of the boardwalk, its foundation, and all aspects of its functional characteristics, as they are presented on Sheet S-0 (i.e. Page 29) of the January 2014 plans prepared by Parsons Brinckerhoff, Inc. design engineers in Boston, Massachusetts. These project plans are available through the hyperlink cited in Footnote 9.[9]

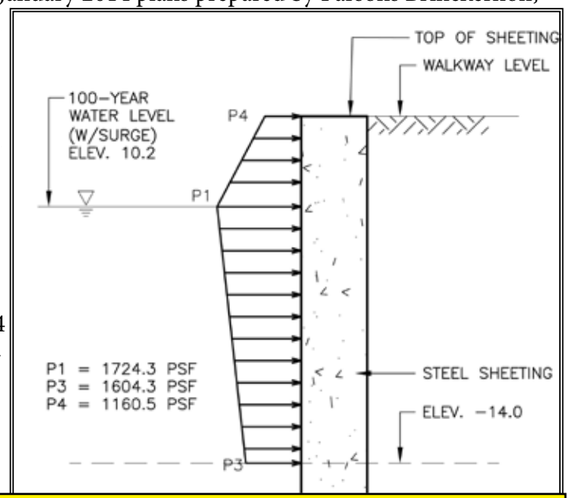

During this bulwark construction, ***Juno,*** The Blizzard of 2015, ***a "Nor'easster,"*** dropped 24 inches of snow on January 27th on the work site. The site suffered no damage as a consequence.

The photograph at the right was taken on December 12, 2014. It illustrates the result of the contractor's work laying large stone against the steel sheet piles to hold the bulwark vertical. Outward pressure against the piles, caused by backfilling and compacting the sand and gravel foundation of the walkway, would otherwise cause the sheet piles to deform and bow outwardly.

8 http://publictrustfoundation.org/webcam.htm

9 Project Plans: http://publictrustfoundation.org/docs/Niantic-Bay-Boardwalk-Plans-Conformed-4-28-14.pdf